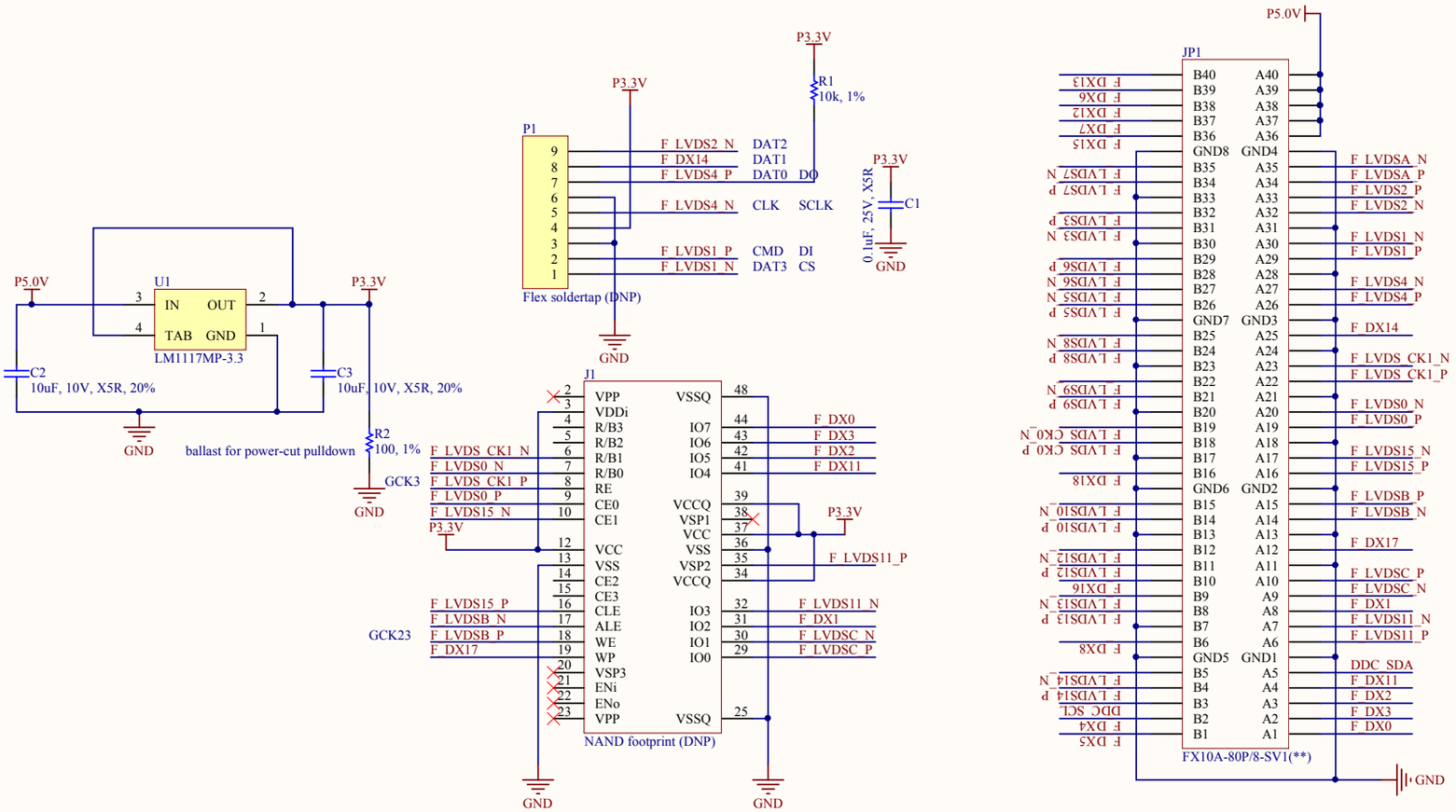

Copyright 2012 Andrew "bunnie" Huang

Copyrights: CC-BY-SA 3.0 Patents: Apache 2.0

Title	SD-NAND Tap	
Size A4	Number	Revision
Date: 7/9/2014		Sheet of
File: F:\largework\..\nand.SchDoc		Drawn By: